Warrior

Warrior™ Feed 304, Warrior™ Feed 304w

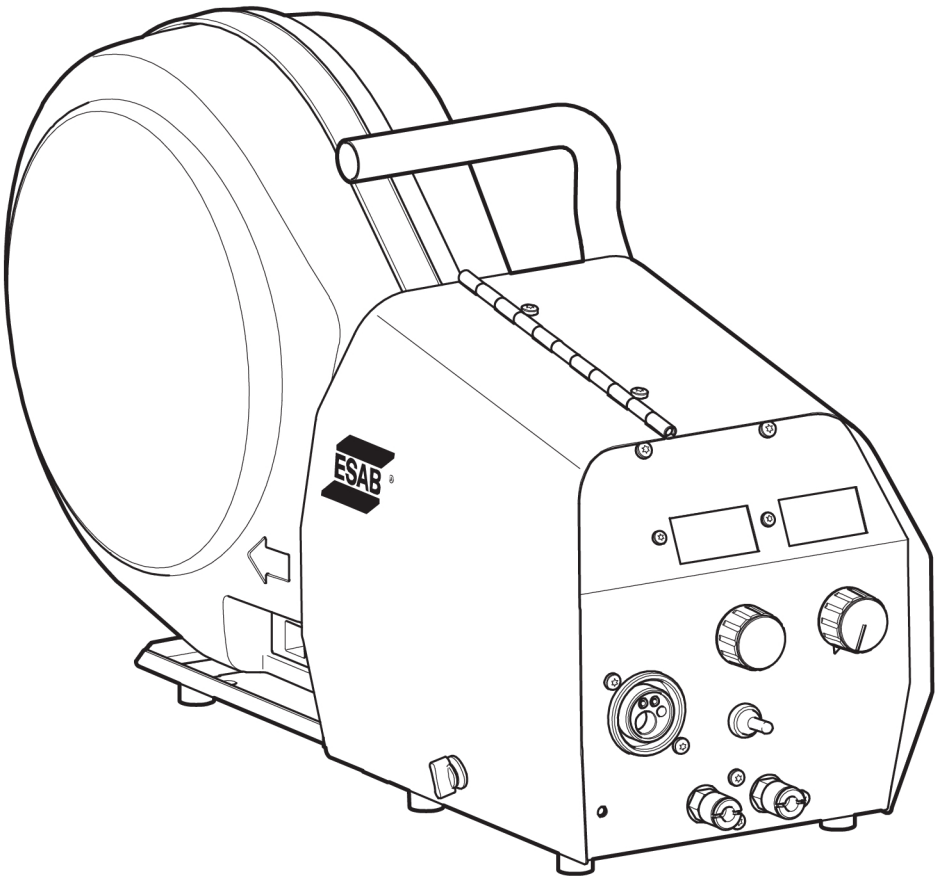

Spare parts list

0459 839 085 GB 20261012

Valid for: serial no. 246-, 324-, 540-xxx-xxxx

Ordering no.	Product
0465 250 880	Warrior™ Feed 304
0465 250 881	Warrior™ Feed 304W

Spare parts may be ordered through your nearest ESAB dealer, see esab.com. When ordering, please state product type, serial number, denominations and ordering numbers according to the spare parts list. This facilitates dispatch and ensures correct delivery.

Maintenance and repair work should be performed by an experienced person, and electrical work only by a trained electrician. Use only recommended spare parts.

SPARE PARTS **4**

WEAR PARTS..... **14**

Rights reserved to alter specifications without notice.

© ESAB AB 2026

SPARE PARTS

C = Component designation in the circuit diagram

Item	Qty	Ordering no.	Denomination	Notes	C
3	1	0464 506 880	Side panel kit	Includes side panel left and right, cotter, turn lock and rating plate	
3	1	0464 507 880	Side panel kit water version	Includes side panel left and right, cotter, turn lock, rating plate and cam straight	
5	1	0465 240 001	Current bar		
6	1	0459 000 899	Wire feed mechanism	**Valid for ser.no. 246-, 324-xxx-xxxx** For details, see wire feed mechanism components (with "HH" item numbers) below.	
	1	0446 093 001	Wire feed mechanism (PM4228 motor)	**Valid from ser.no. 540-xxx-xxxx** For details, see wire feed mechanism components (with "HH" item numbers) below.	
7	1	0461 149 001	Isolation plate	30-4 Mech	
8	1	0153 043 002	Insulating washer		
9	2		Screw M65	M6×25 - 8.8 FZB	
10	2		Nut M6M	M6 - 8.8 FZB	
11	2	0191 574 103	Insulating sleeve	M6	
12	2		Screw MRT	M5× 16	
13	1	0487 166 895	PC-board Warrior™	**Valid for ser.no. 246-, 324-xxx-xxxx** Origo Feed 304 Encoder	13AP1
	1	0487 166 897	PC-board configured for Warrior™ Feed PM4228	**Valid from ser.no. 540-xxx-xxxx**	13AP1
14	1	0160 609 881	Machine connector	Type OKC	
15	1	0466 325 001	Silicone gasket	OKC	
16	1		Washer BRB	10.5 FZB	
17	2		Cup spring washer		
18	1		Screw M6S	M10×20 - 8.8 FZB	
19	1	0146 967 881	Brake hub		
20	1		Nut	M16-8-A2K	
21	1	0459 620 001	Washer		
22	1	0193 054 007	Solenoid valve		13YV1
23		0465 284 882	Cable set		
24		0465 284 880	Cable set	From wire feed mechanism motor to PC board	
25		0465 284 881	Cable set	From encoder to PC board	

 © ESAB AB 2026

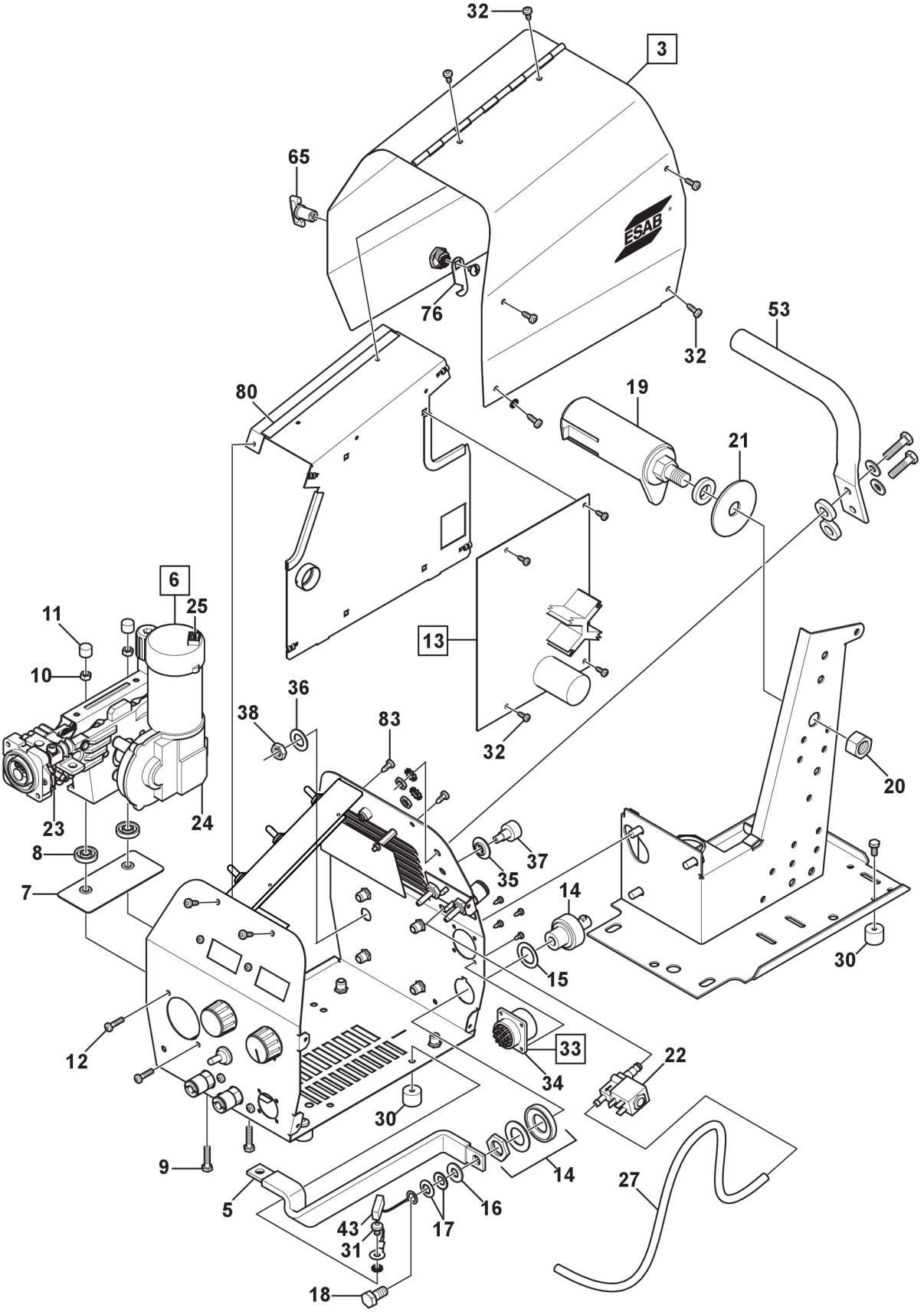
32
3
65
76
32
53
80
19
21
6
25
11
10
13
36
38
83
32
20
23
24
8
37
35
7
14
30
15
12
33
22
34
30
9
14
27
5
16
43
17
31
18

© ESAB AB 2026

C = Component designation in the circuit diagram

Item	Qty	Ordering no.	Denomination	Notes	C
27	1	0349 487 059	Gas hose	0.6 m Red PVC D=8 mm, ID=5 mm	
30	6	0467 695 001	Rubber foot	Part no. stick 135	
31	4		Screw MRT	M6×8 - 8.8 FZB	
32	17		Screw RTS	ST4.8×16	
33	1	0465 285 880	Cable assembly	19-pol	
34		0538 500 203	Pin plug		
35	1	0458 748 001	Insulating bushing		
36	1	0458 748 002	Insulating washer		
37	1	0156 602 001	Inlet nozzle	0.8 - 1.6 mm, Fe, SS, A	
38	1		Nut ML6M 6K	M10 FZB	
43	1	0467 911 881	Capacitor		
53	1	0465 263 001	Handle	6.3×2.4	
65	1	0465 420 002	Turn lock		
76	1	0465 457 001	Cam straight	With hook	
80	1	0192 526 002	Sealing strip	330 mm, 225 CR	
83	2		Screw	M4×8	

 © ESAB AB 2026

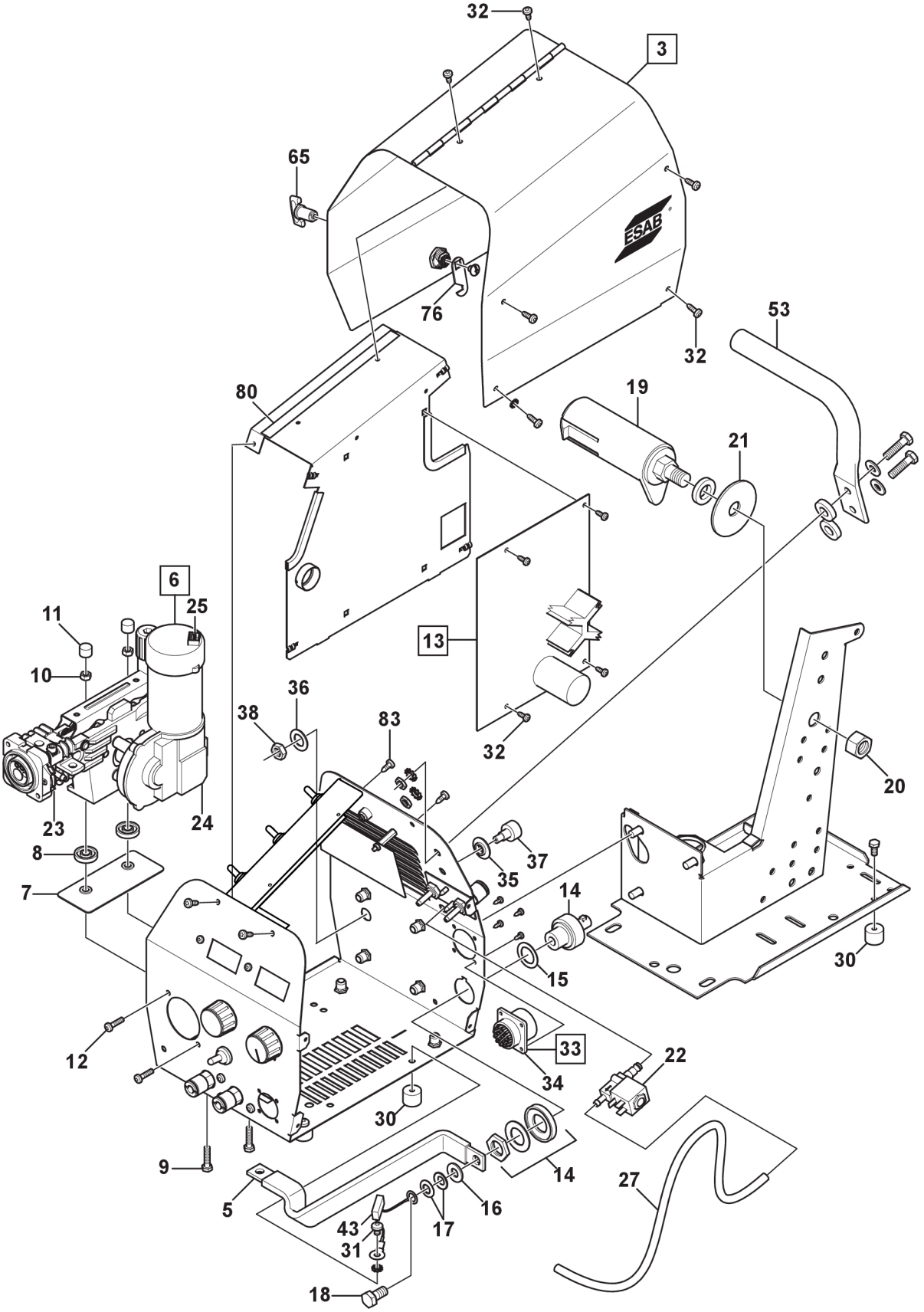
32
3
65
76
32
53
80
19
21
6
25
11
10
13
36
38
83
32
20
23
24
8
37
35
7
14
30
15
12
33
22
34
30
9
14
27
5
16
43
17
31
18

 © ESAB AB 2026

C = Component designation in the circuit diagram

Item	Qty	Ordering no.	Denomination	Notes	C
26	1	0465 368 001	Decal front	Feed 304	
	1	0465 368 002	Decal front water	Feed 304w	
39	1	0487 990 880	Display board		
40	2		Nut	M4-8-A2K	
41	2		Distance screw	M4×25	
	2		Distance screw	M4×18 **From ser.no. 324-xxx-xxxx**	
42	3		Screw	M4×8	
44	2		Distance screw	M4×12	
50	1	0321 475 882	Knob		
55	1	0465 370 001	Decal	Small V/A	
67*	1	0465 288 880	Cable assembly	Potentiometers, switches and cable	
	1	0465 571 880	Cable assembly	Potentiometers, switches and cable **From ser.no. 324-xxx-xxxx**	
68	3	0194 423 101	Switch, inside		
69	1	0194 423 201	Switch, front		
70	1	0191 870 916	Potentiometer		
71	1	0194 424 116	Potentiometer	10 turns	
72	1	0321 475 893	Knob		
75	1	0465 276 880	Water kit	Quick connectors and hoses	
77	4	0446 967 002	Quick connector	Feed 304w Order along with item 26 and 78	
78	1	0446 932 001	Rear decal water	Feed 304w	
79	1	0349 487 059	Hose	Red 0.46 m	
81	1	0457 290 033	Hose	Blue 0.5 m	
82	4	0194 423 901	Sealing cap		
83	1	0465 451 881	Remote Kit Railtrac / Miggytrac		

* Not shown in graphic

 © ESAB AB 2026

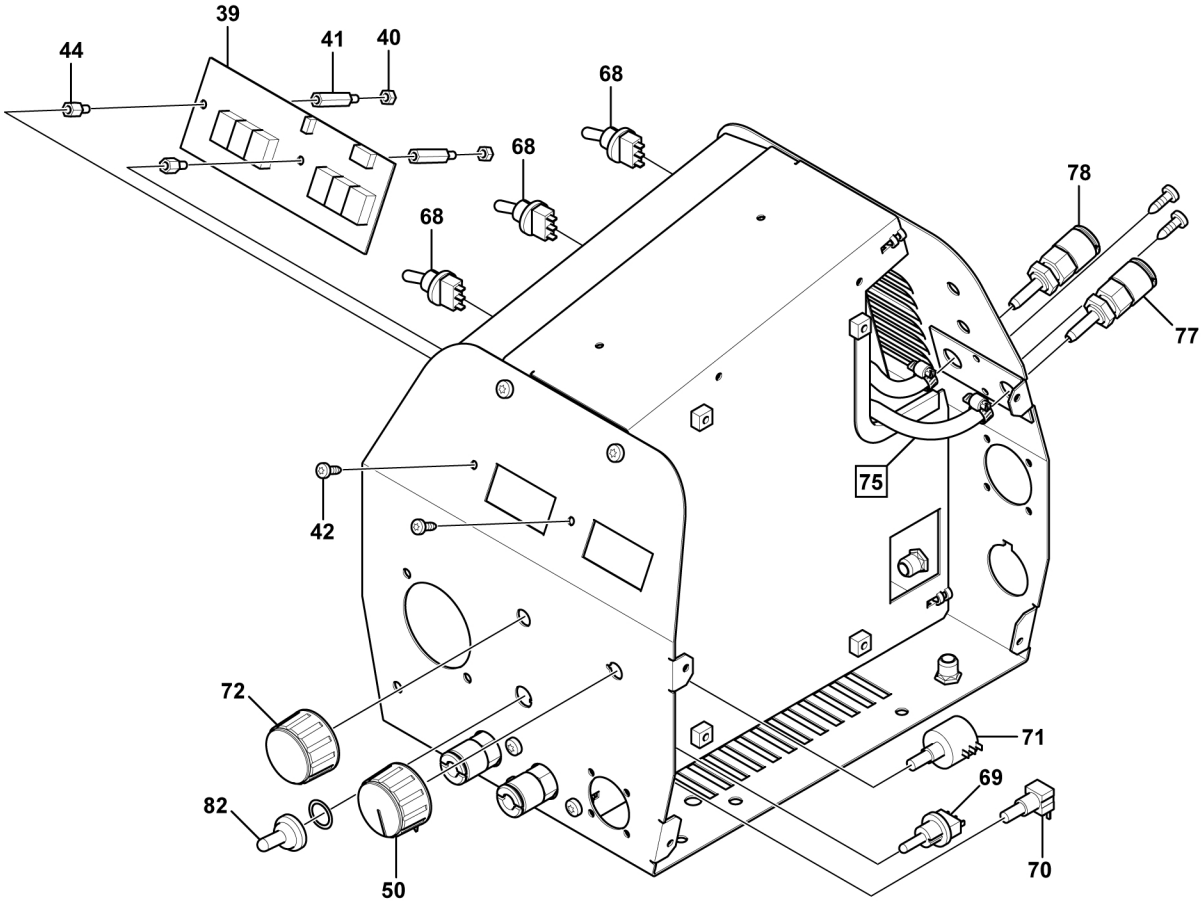

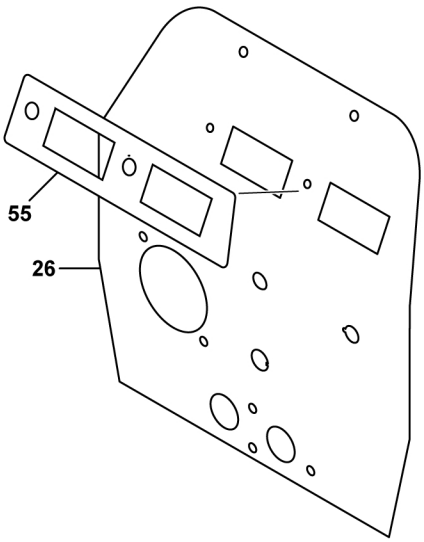

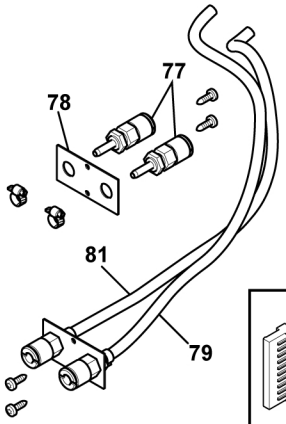

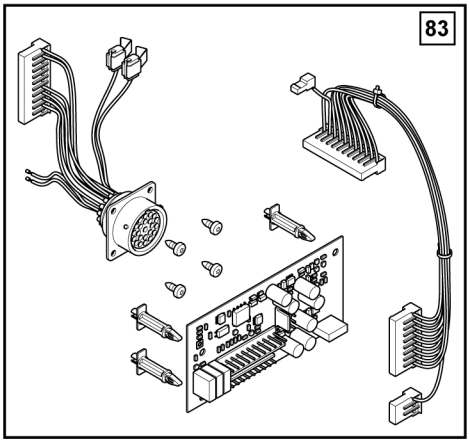

 © ESAB AB 2026

C = Component designation in the circuit diagram

Item	Qty	Ordering no.	Denomination	Notes	C
		0459 000 899	**Wire feed mechanism**	**Valid for ser.no. 246-, 324-xxx-xxxx** Includes items HH1 - HH21 and HH23 - HH41	
		0446 093 001	**Wire feed mechanism** (PM4228 motor)	**Valid from ser.no. 540-xxx-xxxx** Includes items HH1 - HH21 and HH23 - HH41	
HH1	1	0459 808 002	Drive unit	**Valid for ser.no. 246-, 324-xxx-xxxx** With encoder	13M4
	1	0465 827 880	Drive unit (PM4228 motor)	**Valid from ser.no. 540-xxx-xxxx** With encoder	13M4
HH3	1	0191 496 114	Key	Included in item HH1	
HH4	1	0215 701 007	Locking washer	Included in item HH1	
HH5	1	0455 046 003	Gear housing		
HH6	1		Screw	M6x40	
HH7	2		Washer	Ø 12/6.4x1.5	
HH8	1	0455 048 001	Insulating tube		
HH9	1		Nut	M6	
HH10	1	0467 911 880	Capacitor	0.1 µF 250V with cable lugs	13C3
HH11	1		Flat pin	6.3x0.8 M6	
HH12	4		Screw	M6x12	
HH13	1	0455 045 001	Insulating sleeve		
HH14	1	0455 044 001	Current connection		
HH15	1		Screw	M8x25	
HH16	1		Washer	Ø 16/8.4x1.5	
HH17	1		Belleville washer	Ø 16/8.2x0.9	
HH18	1		Nut	M6	
HH19	2	0368 750 001	Insulating sleeve	For cable set	
	1	0465 758 880	Cable harness torch		
HH20	1	0458 918 880	Front flange with PC-board	Current relay	
HH21	1	(W)	Outlet nozzle		
HH22	4	0153 043 002	Insulating washer		
HH23	1	0469 838 001	Cover		
HH24	3		Screw		
HH25	1	(W)	Drive gear		
HH26	1		Washer	Ø 16/5x1	
HH27	1		Screw	M4x12	

 © ESAB AB 2026

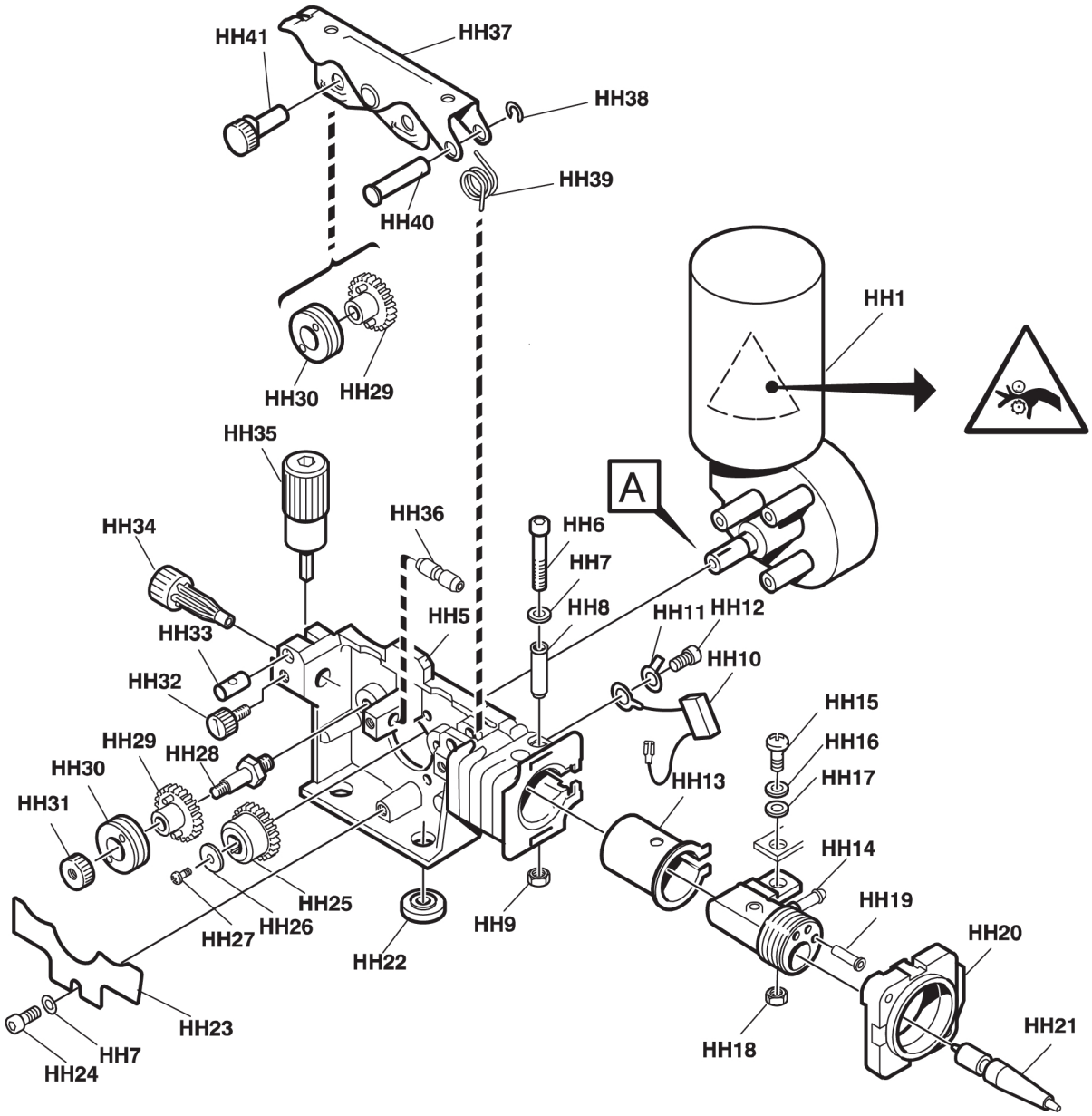
HH41
HH37
HH38
HH39
HH40
HH1
HH30
HH29
HH35
A
HH34
HH36
HH6
HH7
HH8
HH5
HH11
HH12
HH33
HH10
HH32
HH15
HH29
HH28
HH16
HH30
HH17
HH13
HH31
HH14
HH25
HH19
HH26
HH9
HH20
HH27
HH22
HH23
HH21
HH7
HH18
HH24

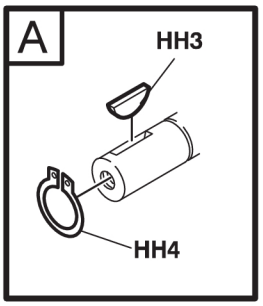
A
HH3
HH4

 © ESAB AB 2026

Item	Qty	Ordering no.	Denomination	Notes	C
HH28	2		Axle feed roll	See item HH102	
HH29	4	(W)	Gear adapter		
HH30	4	(W)	Feed/pressure roller		
HH31	2		Locking nut	See item HH102	
HH32	3	0458 689 001	Screw for nozzle	Pole screw	
HH33	1		Pin bolt	See item HH101	
HH34	1	(W)	Inlet nozzle		
HH35	1		Pressure device	See item HH101	
HH36	1	(W)	Intermediate nozzle		
HH37	1		Pressure arm	See item HH100	
HH38	1		Locking washer	See item HH100	
HH39	1		Torsion spring	See item HH100	
HH40	1		Shaft	See item HH100	
HH41	2	0458 999 001	Shaft		

For wear parts (W) see Section WEAR PARTS.

SPARE PART KITS

Item	Ordering no.	Denomination	Notes
HH100	0459 227 880	Pressure arm set	Includes items HH37, HH38, HH39 and HH40
HH101	0459 228 880	Pressure device set	Includes items HH33, HH35 and one screw M3×12
HH102	0458 722 880	Axle and nut	Includes items HH28 and HH31

 © ESAB AB 2026

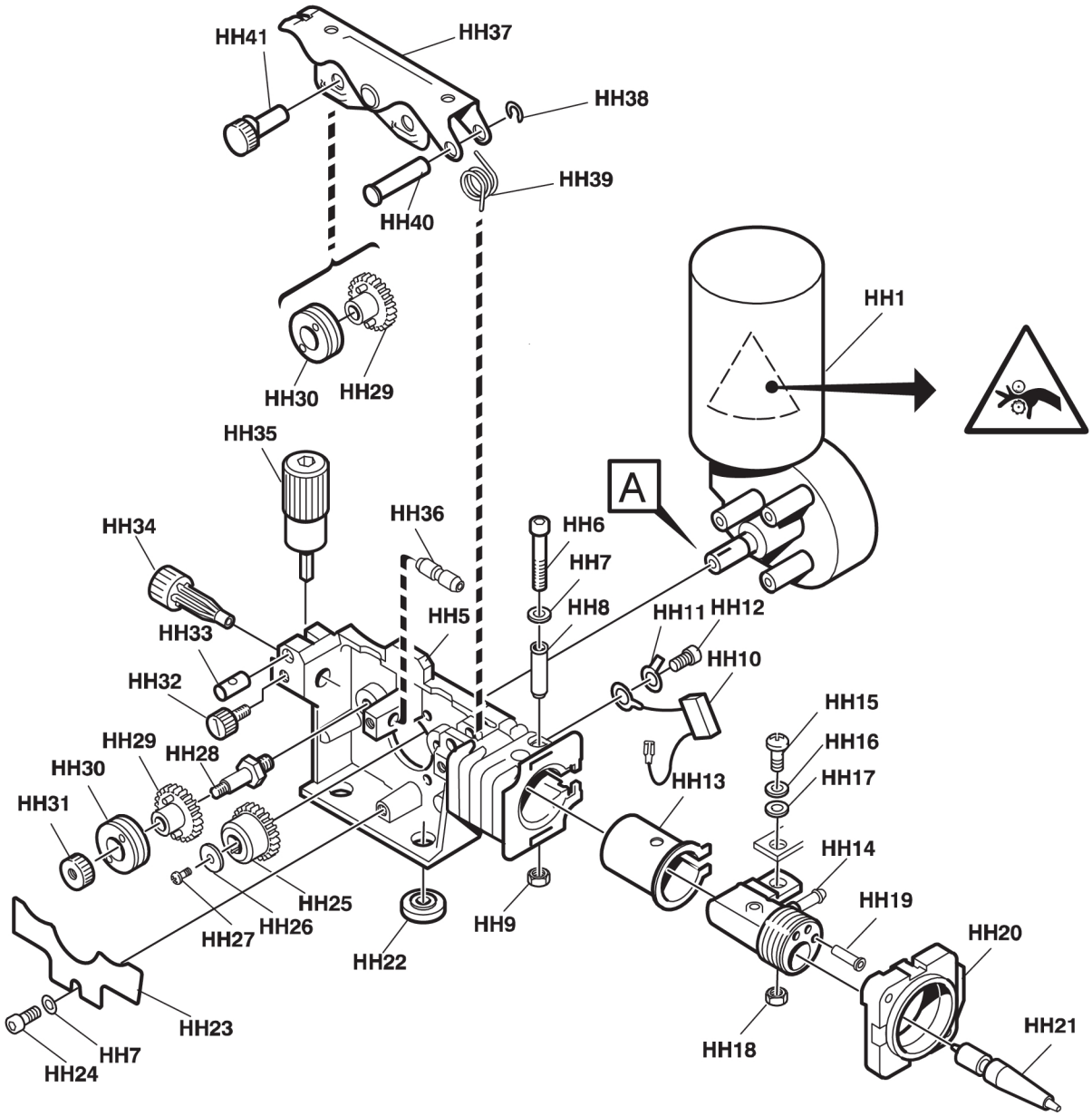
HH41
HH37
HH38
HH39
HH40
HH1
HH30
HH29
HH35
A
HH34
HH36
HH6
HH7
HH8
HH5
HH11
HH12
HH33
HH10
HH32
HH15
HH29
HH28
HH16
HH30
HH17
HH13
HH31
HH14
HH25
HH19
HH26
HH9
HH20
HH27
HH22
HH23
HH21
HH7
HH18
HH24

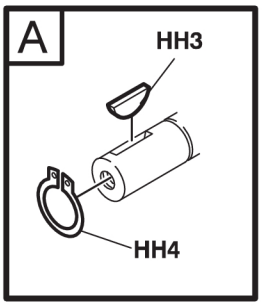
A
HH3
HH4

 © ESAB AB 2026

WEAR PARTS

Item	Ordering number	Denomination	Wire type	Wire dimensions
HI 1	0455 072 002 0456 615 001	Intermediate nozzle Intermediate nozzle	Fe, Ss & cored Al	Ø 2.0 mm steel for 0.6-1.6 mm Ø 2.0 mm plastic for 0.8-1.6 mm
HI 2	0469 837 880 0469 837 881	Outlet nozzle Outlet nozzle	Fe, Ss & cored Al	Ø 2.0 mm steel for 0.6-1.6 mm Ø 2.0 mm plastic for 0.8-1.6 mm
HI 3	0191 496 114	Key		
HI 4	0215 701 007	Locking washer		
HI 5a	0459 440 001	Motor gear euro, drive gear		

Item	Ordering number	Denomination	Wire type	Wire dimen-sions (mm)	Groove type	Roller markings
HI 5b	0459 052 001	Feed/pressure rollers	Fe, Ss & cored	Ø 0.6 & 0.8	V	0.6 **S2** & 0.8 **S2**
	0459 052 002	Feed/pressure rollers	Fe, Ss & cored	Ø 0.8 & 1.0	V	0.8 **S2** & 1.0 **S2**
	0459 052 003	Feed/pressure rollers	Fe, Ss & cored	Ø 0.9/1.0 & 1.2	V	1.0 **S2** & 1.2 **S2**
	0459 052 013	Feed/pressure rollers	Fe, Ss & cored	Ø 1.4 & 1.6	V	1.4 **S2** & 1.6 **S2**
	0458 825 001	Feed/pressure rollers	Cored	Ø 0.9/1.0 & 1.2	V-knurled	1.0 **R2** & 1.2 **R2**
	0458 825 010	Feed/pressure rollers	Cored	Ø 1.2 & 1.2	V-knurled	1.2 **R2** & 1.2 **R2**
	0458 825 002	Feed/pressure rollers	Cored	Ø 1.2 & 1.4	V-knurled	1.2 **R2** & 1.4 **R2**
	0458 825 003	Feed/pressure rollers	Cored	Ø 1.6	V-knurled	1.6 **R2** & 2.0 **R2**
	0458 824 001	Feed/pressure rollers	Al	Ø 0.8 & 0.9/1.0	U	0.8 **A2** & 1.0 **A2**
	0458 824 002	Feed/pressure rollers	Al	Ø 1.0 & 1.2	U	1.0 **A2** & 1.2 **A2**
	0458 824 003	Feed/pressure rollers	Al	Ø 1.2 & 1.6	U	1.2 **A2** & 1.6 **A2**
Only use pressure and feed rollers marked **A2**, **R2** or **S2**. The rollers are marked with wire dimension in mm, some are also marked with inch.						

 © ESAB AB 2026

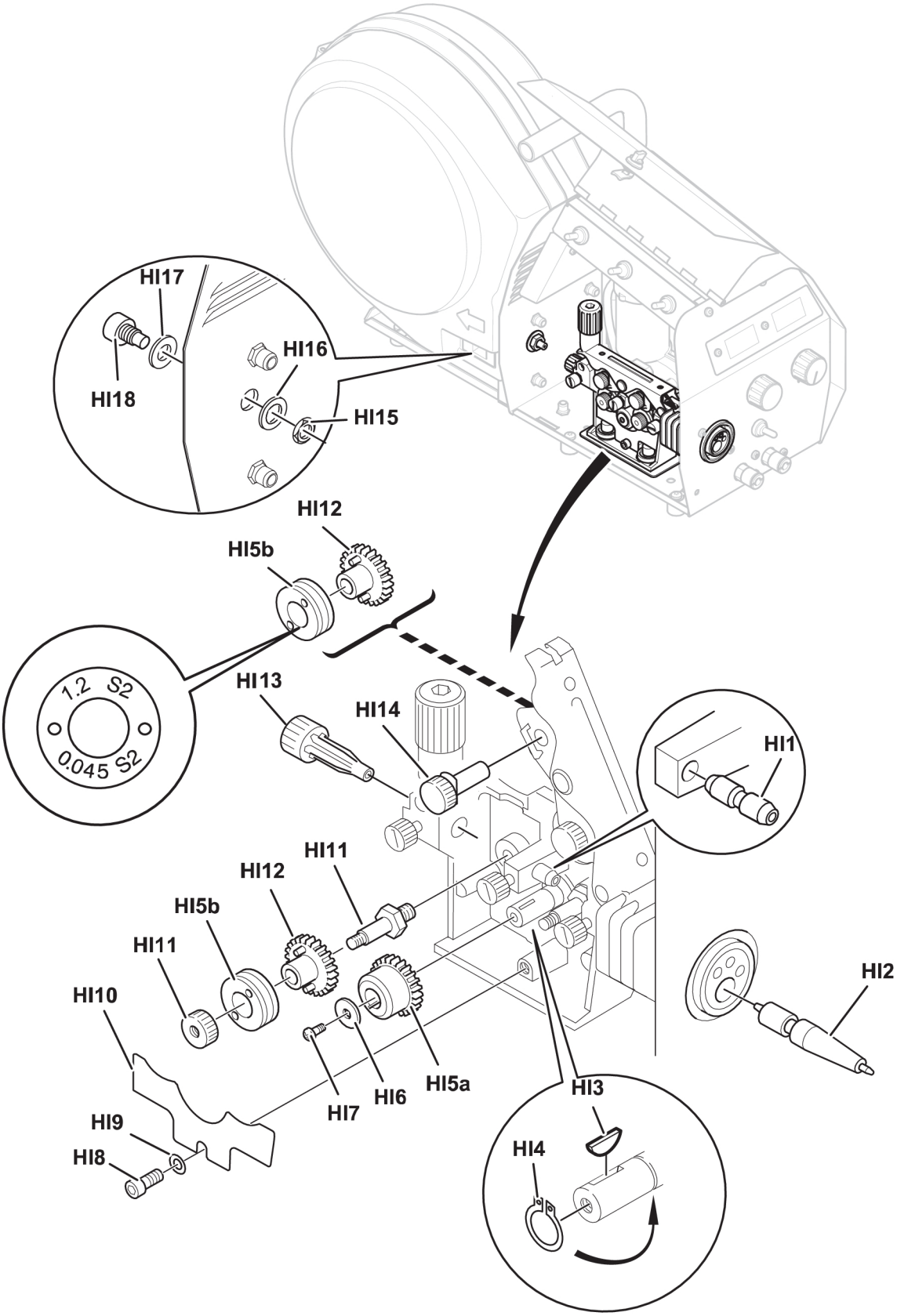
HI17
HI18
HI16
HI15
HI12
HI5b
1.2 S2
0.045 S2
HI13
HI14
HI1
HI11
HI12
HI5b
HI11
HI10
HI2
HI5a
HI6
HI7
HI3
HI9
HI8
HI4

 © ESAB AB 2026

Item	Ordering number	Denomination	Notes
HI 6		Washer	Ø 16/5×1
HI 7		Screw	M4×12
HI 8		Screw	M6×12
HI 9		Washer	Ø 16/8.4×1.5
HI 10	0469 838 001	Cover	
HI 11	0458 722 880	Axle and Nut	
HI 12	0459 441 880	Gear adapter	
HI 13	0455 049 001	Inlet nozzle	Ø 3mm for 0.6-1.6mm Fe, Ss, Al and cored wire
	0460 007 001	Inlet nozzle	**Long-life** for Fe, Ss and cored wire
HI 14	0458 999 001	Shaft	
HI 15		Nut	M10
HI 16	0458 748 002	Insulating washer	
HI 17	0458 748 001	Insulating bushing	

Item	Ordering number	Denomination	Wire type	Wire dimensions
HI 18	0156 602 001	Inlet nozzle	Ø 16/5×1	Ø 2 mm plastic for 0.6 - 1.6 mm

Welding with aluminium wire

In order to weld with aluminium wire, U-shaped rollers, nozzles and liners for aluminium wire **must** be used. It is recommended to use 3 m long welding torch for aluminium wire, equipped with appropriate wear parts.

 © ESAB AB 2026

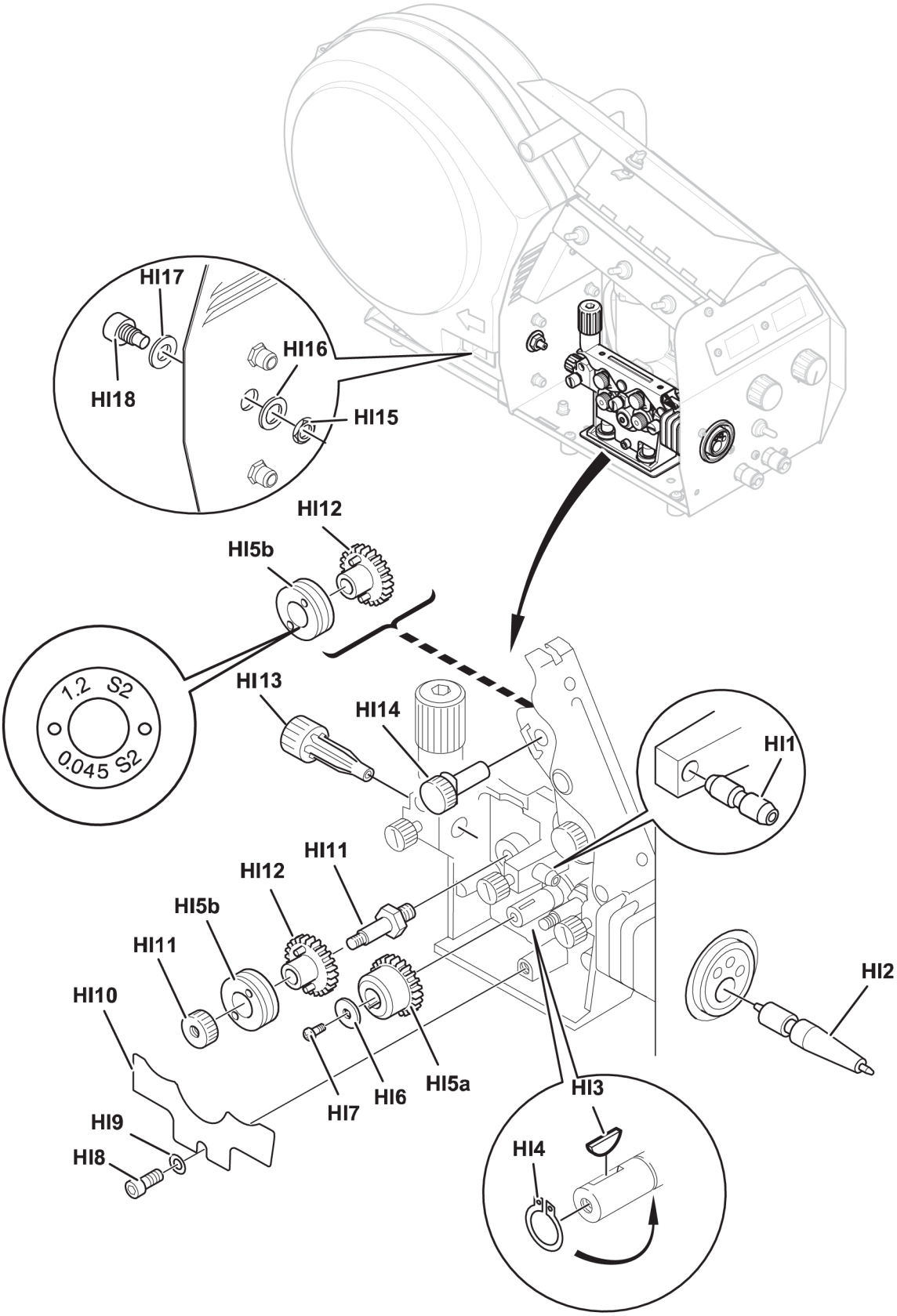
HI17
HI18
HI16
HI15
HI12
HI5b
1.2 S2
0.045 S2
HI13
HI14
HI1
HI11
HI12
HI5b
HI11
HI10
HI2
HI5a
HI6
HI7
HI3
HI9
HI8
HI4

 © ESAB AB 2026

A **WORLD** OF **PRODUCTS** AND **SOLUTIONS.**

For contact information visit esab.com

ESAB AB, Lindholmsallén 9, Box 8004, 402 77 Gothenburg, Sweden, Phone +46 (0) 31 50 90 00

---

manuals.esab.com